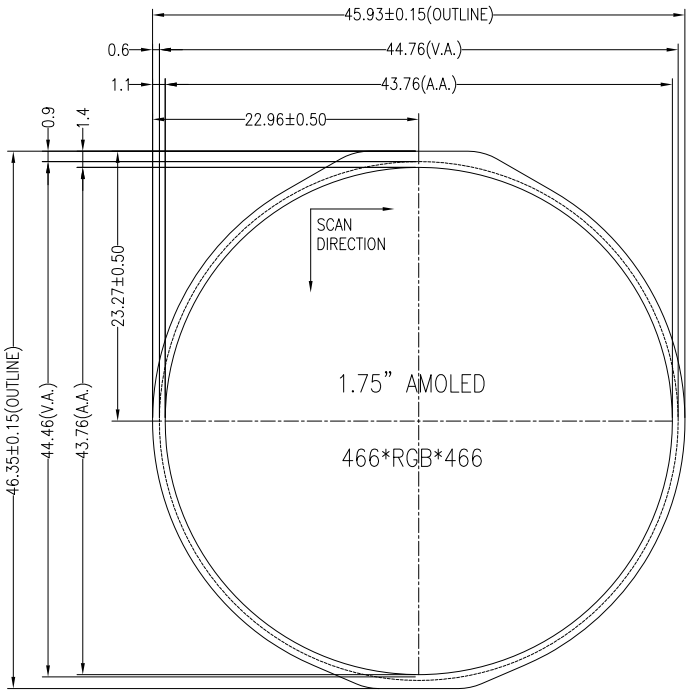

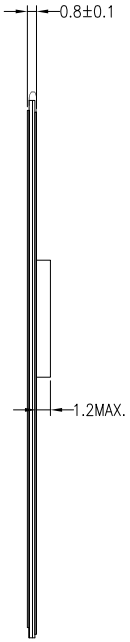

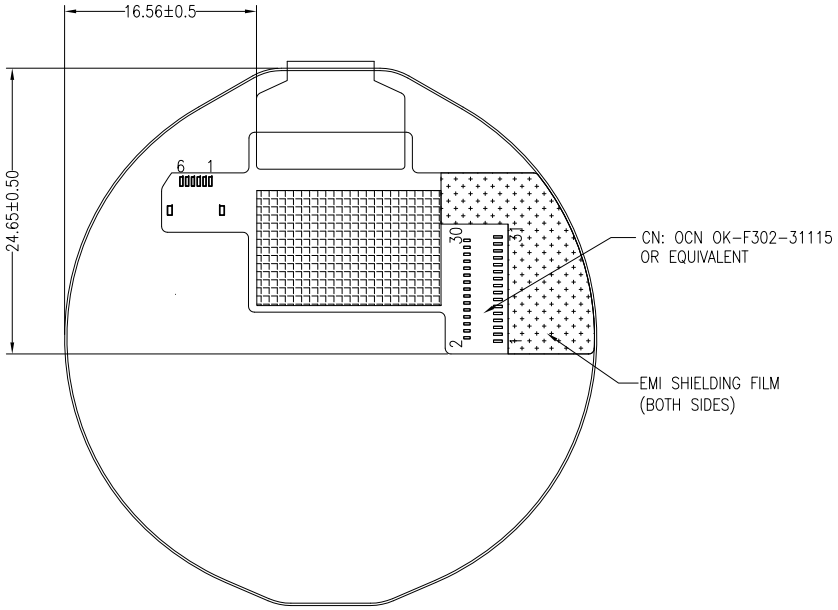

PIN DESCRIPTION

PIN	SYMBOL
1	GND
2	NC(TP_INT)
3	NC(TP_RST)
4	NC(TP_SDA)
5	NC(TP_SCL)
6	NC(TP_VDD)
7	GND
8	IOVCC
9	VCI
10	VBAT
11	VCI_EN
12	GND
13	MTP PWR
14	RESET
15	CSX
16	SDI RDX
17	DCX
18	WRX SCL
19	D1
20	D0
21	TE
22	GND
23	D1P
24	D1N
25	GND
26	CLKP
27	CLKN
28	GND
29	D0P
30	D0N
31	GND

NOTES:

1. DISPLAY TYPE: AMOLED
2. VIEWING DIRECTION: FULL VIEWING ANGLE
3. OPERATING VOLTAGE: VCI=3.3V, IOVCC=1.8V/2.8V
4. DRIVER IC: CO5300
5. INTERFACE: QSPI, MIPI
6. OPERATING TEMP: −20°C ~ 70°C
7. STORAGE TEMP: −40°C ~ 80°C
8. SURFACE LUMINANCE: 770 CD/M^2 (TYP.)
9. UNMARKED TOLERANCE: ±0.2MM
10. ROHS COMPLIANT

VER.	REVISED DESCRIPTION	REVISER	DATE
01	FIRST ISSUE	CAROL	2025.04.25

MULTI-INNO TECHNOLOGY CO., LTD.

DRAWN BY:	CAROL		MODULE P/N: MI0175A0-F
CHECKED BY:		SCALE : 1/1	
APPROVED BY:		UNIT: mm	DESCRIPTION: AMOLED MODULE
VERSION NO:	01	SHEET NO: 1/1	